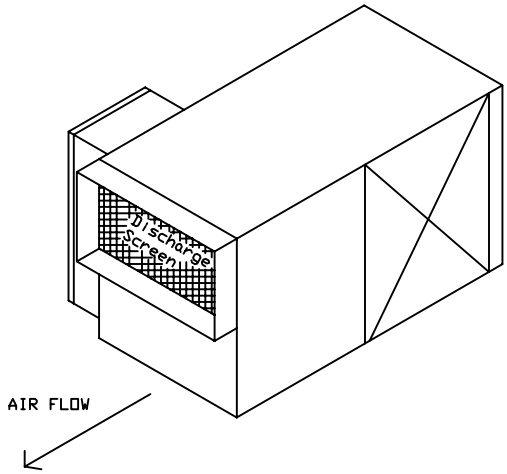

Markel
MODEL: MFHE & 7200 Series
FIG-5

STANDARD UNIT

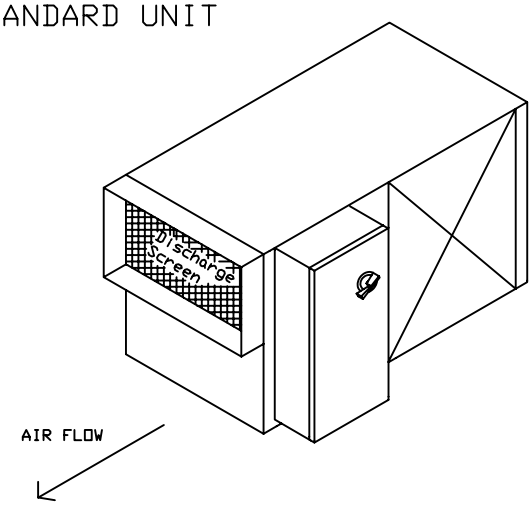

Markel
MODEL: MFHE & 7200 Series
FIG-3

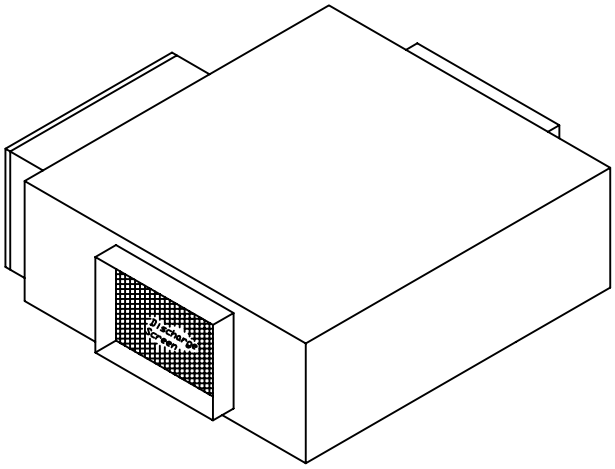

Markel
Model 7300 Series
Fig 5

Standard Unit

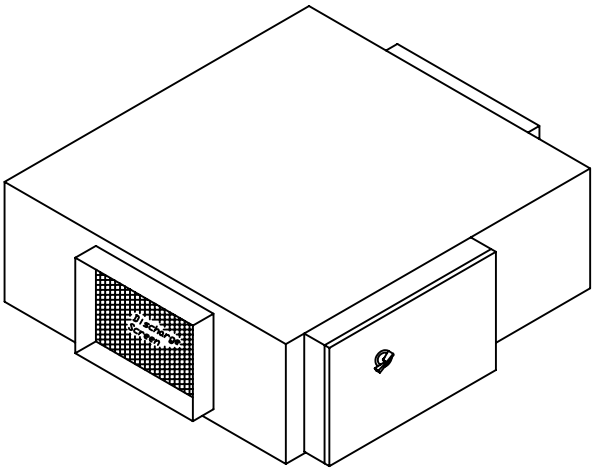

Markel
Model 7300 Series
Fig 3