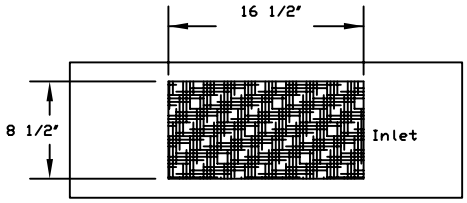

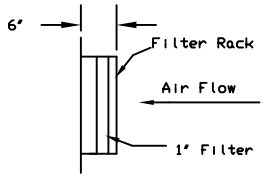

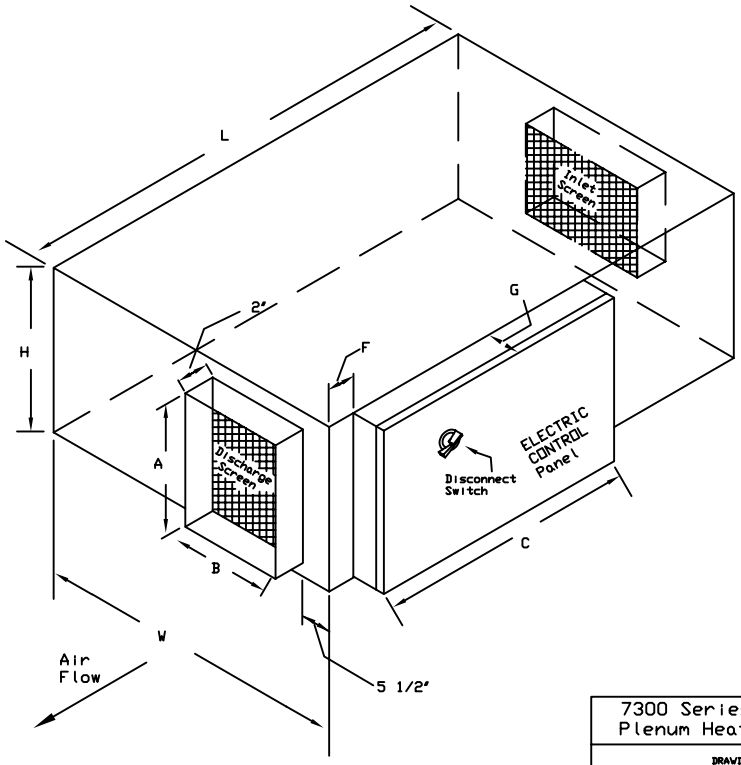

NOTE:
Control Panel access
Standard as shown
For Panel on Opposite
Side Access Specify
And Order Figure 5.

NOTE: Dimension C and G Will Vary
With Accessories.

DIMENSIONS								
7300 SERIES	C	F	G	H	L	W	DISCHARGE	
							A	B
5 & 10 KW	28. 75"	1"	6"	11. 75"	45"	26"	8"	10"

7300 Series 5 & 10 KW
Plenum Heater

DRAWING NO.
4050

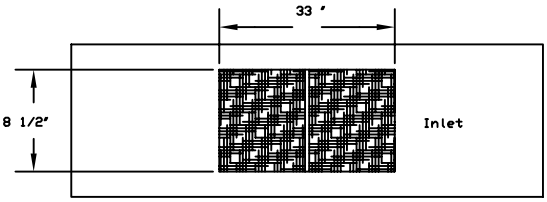

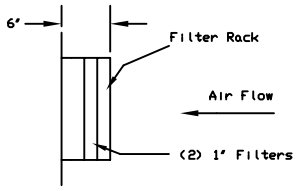

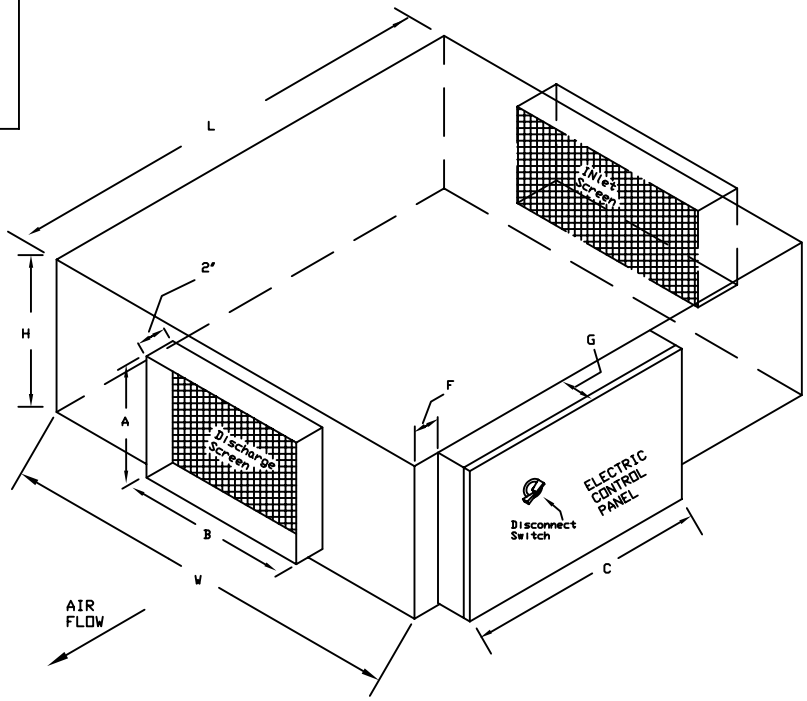

NOTE:
Control Panel Access
Standard as Shown
For Panel On Opposite
Side Access Specify
And Order Figure 5.

NOTE: Dimension C and G Will Vary
With Accessories.

DIMENSIONS								
7300 SERIES	C	F	G	H	L	W	DISCHARGE	
							A	B
12, 15 & 18 KW	28. 75"	2"	6"	11. 75"	45"	43"	8"	20"

7300 Series 12, 15, & 18 KW
PLENUM HEATER

DRAWING NO.
4051